DORM LINE
by SIMMONS

Planning...installation...maintenance...financing

—all EASIER with Simmons Dorm Line

From start to finish, your job is simplified with Dorm Line installations—simplified even in building design. Rooms may be planned in standard shapes and sizes to save time and costs. They may be arranged in a wide variety of ways without loss of spaciousness. Then as you add Dorm Line units, you achieve efficient, colorful, homelike rooms.

Simmons color range makes it possible for each dorm room to vary in color scheme without changing basic wall color. The variety of combinations available in chests, desks and wardrobes permits unlimited floor plan arrangements.

Installation is quick and easy — no time-consuming custom-built wardrobe or closet construction required. Easy maintenance — certainly. Steel construction means "student-proof" abuse-resistance and durability . . . wardrobe frames never warp . . . doors won't sag or stick . . . steel drawers assure smooth, quiet operation.

Money problems are easily solved. Simmons Dorm Line wardrobes, chests, desks—even beds—are built-in to qualify for *long-term* government financing. This all adds up to furniture that long outlasts the loan!

Simmons **DORM LINE** *construction safeguards your investment . . .*

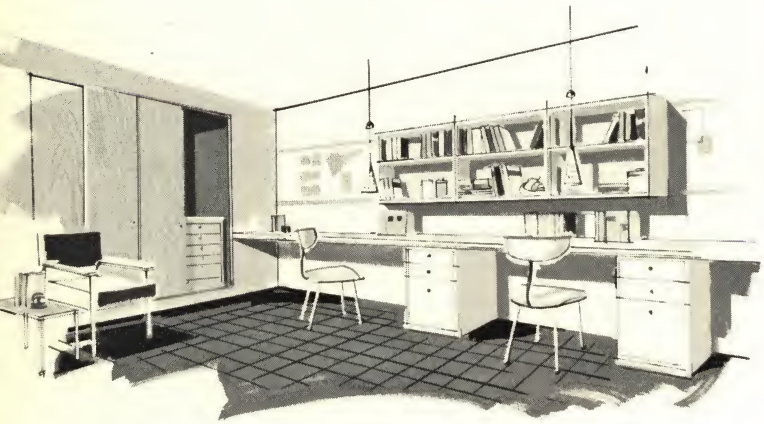

lasting quality

Architects and designers are assured of specifying sturdy, attractive, livable dormitory furnishings with Dorm Line. Efficiently designed units offer unexcelled opportunity for effective, economical use of floor space. Rigid standards of quality control assure furniture that will keep its new look through generations of students with minimum maintenance.

savings • approved financing

Prefabricated, steel framed wardrobes shipped k.d. are ready to be installed on the job at a fraction of the cost and time required for wood units. Standard, unvarying dimensions enable the architect to design storage areas with the knowledge that each unit will fit perfectly into the space provided. All built-in units in the Simmons Dorm Line qualify for long term government financing.

simplicity of lines

Dorm Line units stay in style throughout their long years of service because their lines are clean and simple. They are never dated, because taste and judgment place no time limit on simplicity.

engineered comfort

True, lasting comfort is designed into every Simmons Dorm Line bed, chair, and desk. Dorm Line units accommodate themselves naturally to comfortable, yet correct, easy body postures—and that comfort stays with them year after year because Dorm Line construction is planned for permanence.

durable lasting colors and finishes

Simmons offers the most comprehensive selection of colors and finishes ever available on dormitory furniture and equipment. The Simmons Dorm Line offers color and individuality without extra expense.

additional units

Dorm Line furniture is by no means limited to the built-in pieces shown here. A complete line of free-standing furniture is available in styles designed to match the built-in units. Simmons is also equipped to design and produce custom dormitory furniture on special order. You are invited to ask about this Simmons service whenever you have a need that cannot be met with standard Dorm Line units.

DORM LINE by SIMMONS

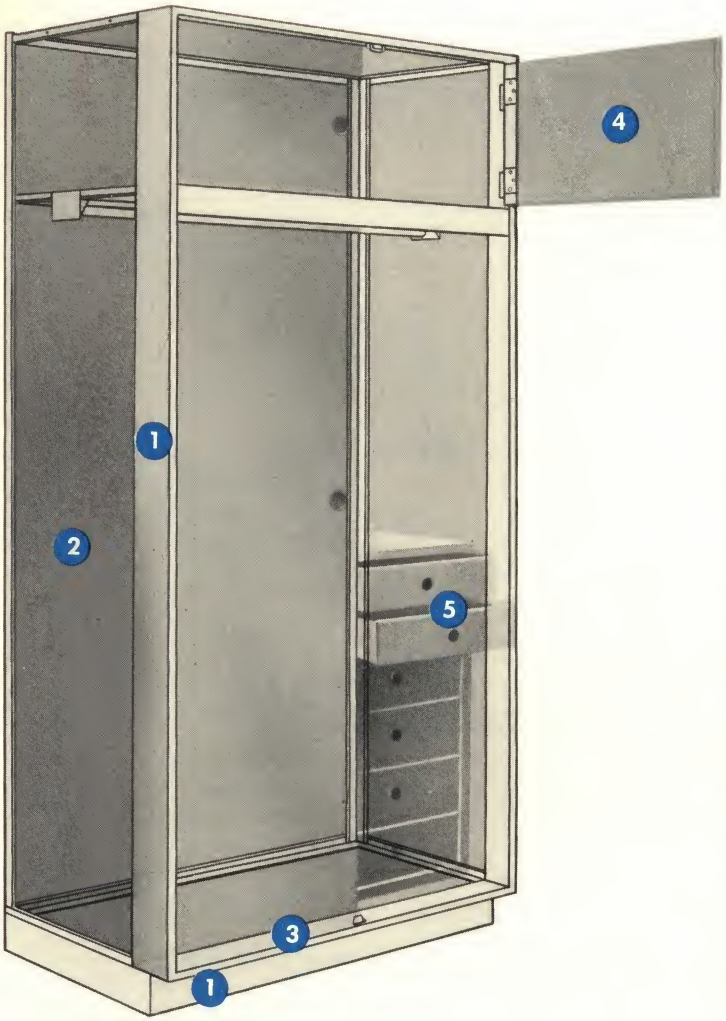

1. welded steel frames, drawers, and bases

Skyscraper construction gives Simmons Dorm Line wardrobes and chests sturdy strength without ugly bulk. Steel framed wardrobes provide more usable space in less area than conventional wood framed built-in construction. After years of use they are as firm and rigid as on the day they're installed. Steel bases anchor firmly to the floor to support whatever weight may be imposed upon them in even the most rigorous dormitory use.

2. Novoply sides, doors and backs

Sides, doors and backs are of Novoply, proved by test and use the most stable material for this type of construction. It is practically free from warp and retains its size and shape in all climates. Sides and doors of Dorm Line wardrobes and sides of chests are available in Birch-faced Novoply sealed and lacquered, paint grade Novoply in any standard Simmons color and plain Novoply sealed and lacquered. Sides and backs also available of masonite.

smoothly operating hardware

3. easy-sliding doors

Stay that way because the extruded aluminum Stanley track assembly is secured to the steel framework and hanger brackets screw into the back facing of doors (not in top edging). Doors withstand 3000-lb. strength tests. Suspension hardware is fully adjustable. Track assembly has nylon rollers for everlasting easy operation. Triple guides at bottom of doors are securely anchored to wardrobe floor.

4. hinged doors

With flush ring-type hardware give easy access to the shelf of wardrobe units. Storage of suitcases and other bulky pieces will be easy. Magnetic catches hold the doors firmly closed, yet permit them to be opened quickly and without effort.

5. drawers

Are built to the highest Simmons standards. Nylon rollers covered with Buna rubber rings and rubber stops assure quiet, smooth operation. Drawers cannot be pulled out of chest accidentally. They never warp or sag. They're impervious to changes in temperature and humidity, and are easily kept clean. Grommet pulls replace the usual projecting and easily broken pulls.

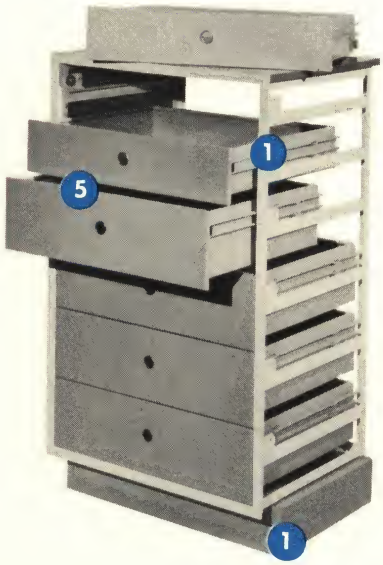

index

	pages
wardrobes	4-5
chests	6
desks, bookcases	7
beds, bookshelves	7
colors	8

Unlimited room arrangements with **DORM LINE** *built-ins . . .*

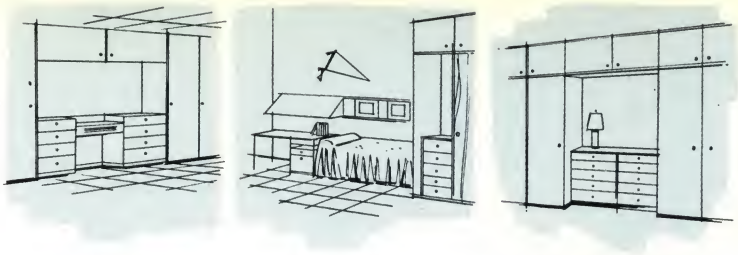

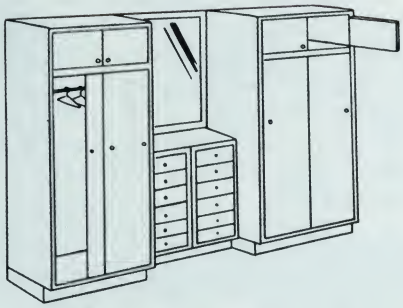

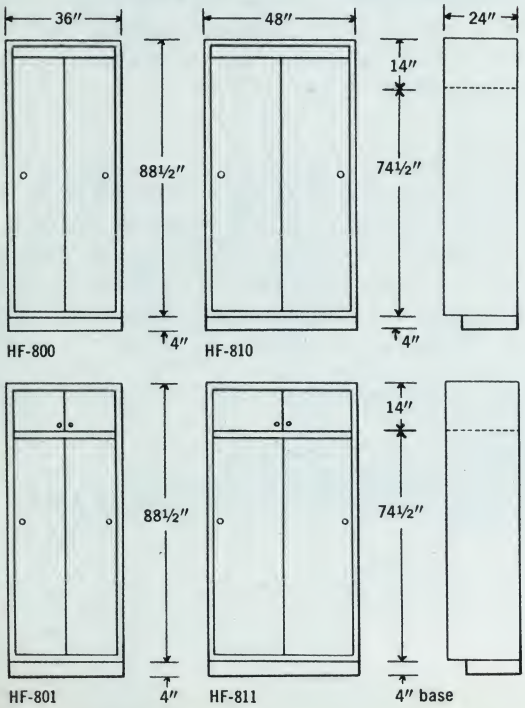

WARDROBES

Basic Unit includes steel framework; 4″ steel toe base; top; ¾″ fir plywood shelf and bottom (sealed and lacquered) clothes hanger. Doors (with hardware), sides and back furnished as required in materials and finishes listed in Tables 2 & 3, below. Chests optional. See page 6.

basic pattern numbers (table 1)

basic pattern no.	depth	width	height with 4″ base	doors with hardware	
				sliding	upper, hinged
HF-800	24″	36″	92½″	2	—
HF-801	24″	36″	92½″	2	2
HF-810	24″	48″	92½″	2	—
HF-811	24″	48″	92½″	2	2

suffix numbers (table 2)

material	1st digit	2nd digit	3rd digit	4th digit	vertical door edges
	door	rt. side	left side	back	
Novoply, sealed & lacquered	–1000	–0100	–0010	–0001	pine
Novoply, painted*	–2000	–0200	–0020	–0002	
birch face Novoply, sealed & lacquered	–3000	–0300	–0030	–0003	basswood
Masonite, painted		–0400	–0040	–0004	
no material	–0000†	——	——	–0000	

*Novoply, when painted, will be of a grade to accept application of paint.
†Track not furnished without doofs.

EXAMPLE:
HF-811-2244—48″ wide, 24″ deep, 92½″ wardrobe

doors painted Novoply	right side painted Novoply	left side and back painted Masonite
4″ steel toe base included		

exterior color scheme numbers (table 3)

colors	1st 2 digits	2nd 2 digits	3rd 2 digits	4th 2 digits
use digits from standard color system, page 8 listing as follows:	framework	side & back panels if painted	doors, if painted	base

interior colors

When doors, side panels are ordered finished plain Novoply or birch face Novoply, finish is sealed and lacquered.

Interior color will be the same as color selected for exposed side panels, if side panels are painted.

If exposed side panels are plain Novoply or birch face Novoply, interior of exposed panels will be finished, sealed and lacquered. Remainder of interior will be the same color as frame and base.

to specify or order, list:

1. Basic pattern number (from table 1)
2. Suffix number, to indicate sides and back materials. 4 digits required. (from table 2)
3. Exterior color scheme (from table 3)

EXAMPLE: HF-800-1144 wardrobe Scheme 25
36″ wide, 92½″ wardrobe, 2 sliding doors, clothes pole
Framework—steel—aqua
Side Panel, right—Novoply, sealed and lacquered
Doors—Novoply sealed and lacquered
Back—Masonite—aqua

DORM LINE by SIMMONS

construction details • wardrobes

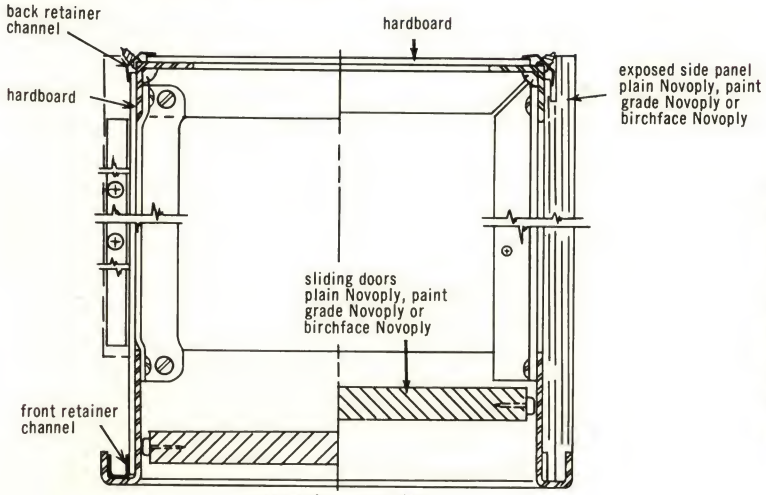

cross-section • top view

architectural specifications

scope: Built-in wardrobe and chest units shown on plans shall be Simmons Dorm Line units as manufactured by Simmons Company, Contract Division, Chicago, Illinois, and as detailed in the Architectural File (Sweet's) 1960.

wardrobes: (specify two or four door model, width, finish, exposed sides). Shipped KD prefinished and ready for assembly.

chests: (specify width, finish, location inside or outside wardrobe).

bases: (specify size, finish).

quarter size

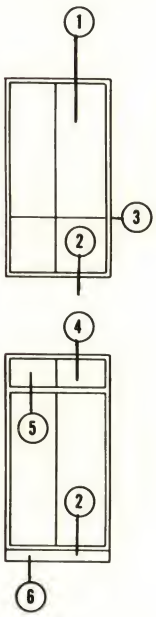

cross-section • side view • two door

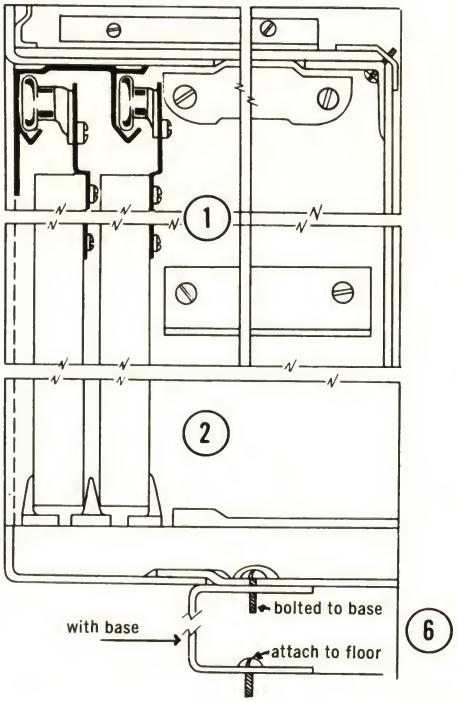

cross-section • side view • four door

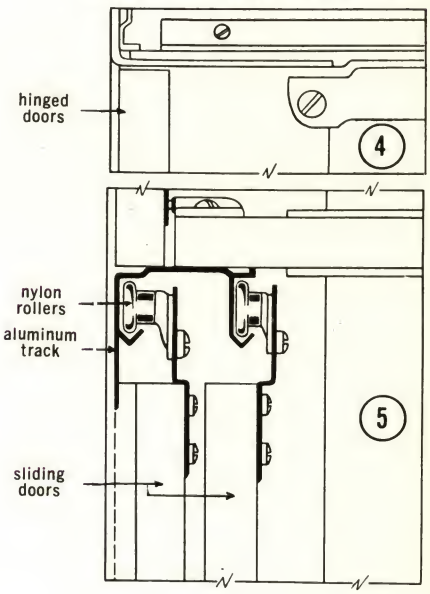

installation details • quarter size

furring in wardrobe top

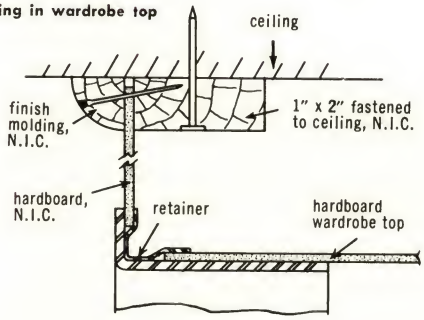

furring in top corner

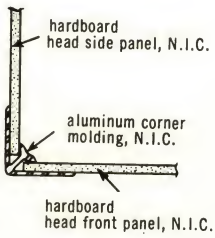

furring in wardrobe side

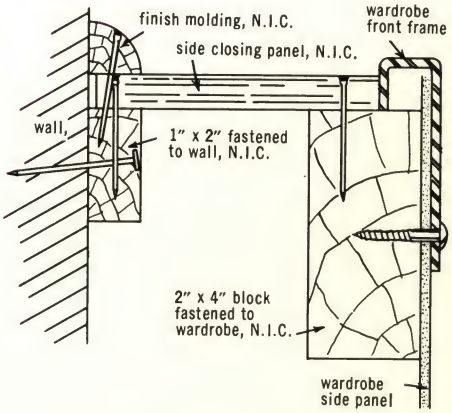

Unlimited room arrangements with **DORM LINE** *built-ins . . .*

HF-830

Basic Built-in Chest Unit includes steel frame with choice of Fiberesin top; six steel drawers with grommet pulls. Drawers operate smoothly on nylon rollers. Automatic stops prevent drawers from being pulled out accidentally. Sides and back furnished as required in materials and finishes listed in Table 6 at right. May be used inside or ouside wardrobes. For use outside wardrobes, 4" toe bases are required.

F-153-37

F-153-37 and F-153-38 Chests may be used as alternates inside or outside built-in wardrobes. Steel top, sides and back. Textolite in choice of colors and patterns available for extra protection on tops. Steel drawers with grommet pulls operate on nylon rollers. Automatic stops prevent drawers from being pulled out accidentally.

chests

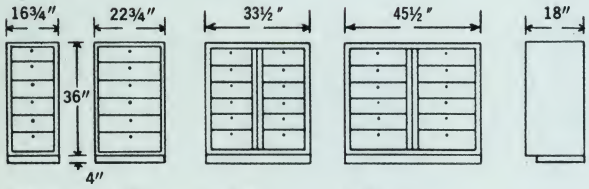

H-830 HF-831 HF-834 HF-835

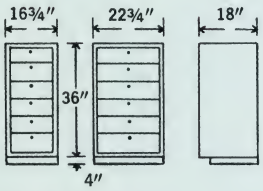

F-153-37 F-153-38

steel bases for chests

Finished in selected standard Simmons color.

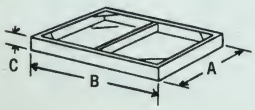

for use with	A	B	C
chests 16¾" wide	15"	16¾"	4"
22¾" wide	15"	22¾"	4".

CHESTS

basic pattern nos. (table 4)

basic pattern no.	depth	width	height without 4" base	no. steel drawers	grommet pulls	welded steel frame	top material
‡HF-830	18"	16¾"	36"	6	yes	yes	Fiberesin
•HF-831	18"	22¾"	36"	6	yes	yes	Fiberesin
*HF-834	18"	33½"	36"	12	yes	yes	Fiberesin
†HF-835	18"	45½"	36"	12	yes	yes	Fiberesin
‡F-153-37	18"	16¾"	36"	6	yes	yes	steel or Texolite
•F-153-38	18"	22¾"	36"	6	yes	yes	steel or Texolite

‡Use with 36" wide wardrobes, or may be freestanding with base.
•Use with 48" wide wardrobes, or may be freestanding with base.
*Two HF-830 with common top and base if any.
†Two HF-831 with common top and base if any.

suffix nos. for HF-830 to 835 chests (table 5)

material	1st digit right side facing	2nd digit left side facing	3rd digit back	4th digit base
Novoply, sealed & lacquered	–1000	–0100	–0010	——
Novoply, painted	–2000	–0200	–0020	——
birch face Novoply, sealed & lacquered	–3000	–0300	–0030	——
Masonite, painted	–4000	–0400	–0040	——
no material	–0000	–0000	–0000	
steel	——	——	——	–0001

suffix nos. F-153-37 & 38 chests (table 6)

component part*	1st digit	2nd digit	3rd digit
steel top	–000	——	——
Texolite top	–100	——	——
with 4" steel toe base	——	–010	——
without toe base	——	–000	——
grommet pulls	——	——	–005

*Sides and back are steel.

color scheme nos. for HF-830 to 835 chests (table 7)

colors†	1st 2 digits	2nd 2 digits	3rd 2 digits	4th 2 digits
Use digits from standard color system, page 8	frame & sides	top	drawers	base

†Sides or backs ordered painted Novoply will be same color as drawers.

color scheme nos. for F-153-37 & 38 chests (table 8)

colors†	1st 2 digits	2nd 2 digits	3rd 2 digits
Use digits from standard color system, page 8	case	drawer	top

†Bases, when ordered, will be finished same color as cases.

to specify or order, list:

1. Basic pattern number (from table 4)
2. Suffix number—3 digits required (from table 5 or 6)
3. Color scheme numbers (from table 7 or 8)

EXAMPLE: HF-830-1140 Scheme 25 FA 33 25 is
16¾" wide, 6 drawer chest, with grommet pulls;
Sides—Novoply, sealed and lacquered;
Back—Masonite, aqua; Frame—aqua;
Top—Sliced birch Feberesin; Drawers—White; No base

EXAMPLE: F-153-38-115 Scheme 25 33 AW is
22¾" wide chest; Top—Texolite—White;
4" Aqua steel toe base; Grommet pulls
Case—Aqua; 6 White drawers

DORM LINE by SIMMONS

DESKS AND RELATED UNITS

basic pattern nos. (table 9)

basic pattern no.	width	depth	height	description
desks				
†F-344	24″	42″	varies	wall hung, steel frame, perforated sides, Fiberesin top.
†F-218	14″	24″	28″	built-in desk pedestals. F-218 is F-216 with 4″ steel toe base. F-219 is F-217 with 4″ steel toe base.
†F-219	14″	30″	28″	
bookcases				
F-210	24″	10″	24″	steel frame, steel shelf
F-211	30″	10″	24″	steel frame, steel shelf
F-214	24″	10″	24″	steel frame, Fiberesin shelf
F-215	30″	10″	24″	steel frame, Fiberesin shelf
file drawer units‡				
F-216	14″	24″	24″	steel cabinet, 2 small & 1 file drawer, grommet pulls
F-217	14″	30″	24″	
suspended drawers				
FD-91	12¾″	16¾″	2½″	steel, perforated sides and bottoms
FD-94	16¾″	16¾″	2½″	steel, perforated sides and bottoms

†Available only as described. No accessory substitutions or additions.
‡File drawer takes Pendaflex folders 4152-1/5.

to specify or order, list:

1. Basic pattern number (table 9).
2. Color scheme code, page 8 (case color, then Fiberesin).

EXAMPLE: 1: F-344 wall hung desk, scheme 23

EXAMPLE 2: F-216 file drawer unit, scheme 27

LAMP FOR BOOKSHELF (table 10)

basic pattern no.	overall length	mount below shelf of
HS-43	30″	36″ (F-222, F-227) and 42″ (F-223, F-228) bookshelves cannot be used with letter bin and suspended drawer. 48″ (F-224 and F-229) bookshelves can be used with letter bin and suspended drawer.

to specify or order, list:

1. Basic pattern number (table 10). Lamp has turn switch.

BEDS (table 11)

basic pattern no.	depth	width	height: without mattress	height: with mattress	mattress size	construction
H-380	75″	33½″	10″	17″	3/0 x 6/3	No-Sag sheet metal
H-380-80	80″	33½″	10″	17″	3/0 x 6/8	No-Sag sheet metal

to specify or order, list:

Basic Pattern no., and color (from standard system, page 8)

BOOKSHELVES AND ACCESSORIES

basic pattern nos. (table 12)

basic pattern no.	width	depth	height	sides & back	shelf
F-222	36″	10″	8¾″	steel	steel
F-223	42″	10″	8¾″	steel	steel
F-224	48″	10″	8¾″	steel	steel
F-227	36″	10″	8¾″	steel	Fiberesin
F-228	42″	10″	8¾″	steel	Fiberesin
F-229	48″	10″	8¾″	steel	Fiberesin

suffix nos. (table 13)

	1st digit perforated metal letter bin F-41	2nd digit perforated metal drawer F-42	3rd digit angle supports to attach shelf to desk F-97
left hand facing	–100	–010	
right hand facing	–200	–020	
left and right hand facing (2 required)	–300	–030	
2 required	——	——	–001

to specify or order, list:

1. Basic pattern number. (from table 12 and/or 13).
2. Suffix numbers if required.
3. Color scheme for bookshelf give case color number first, followed by Fiberesin color if applicable. Steel shelf always same color as sides and back.
4. If bookshelf is ordered with letter bin and/or suspended drawer, itemize order.

EXAMPLE 1: F-227-100, scheme 35FA (36″ wide bookshelf with letter bin left hand facing bookshelf warm grey sides and back, sliced birch F.beresin shelf)

EXAMPLE 2: 1 F-229-110 bookshelf consisting of:
1 F-229 bookshelf, scheme 35 FA (sliced birch)
1 F-41 letter bin, scheme 35
1 F-42 drawer, scheme 35

details — scale: ⅜″ = 1′0″

file drawer units

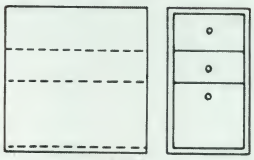

F-216

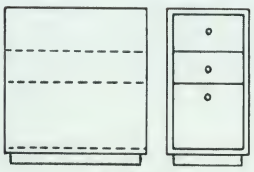

F-218

book cases

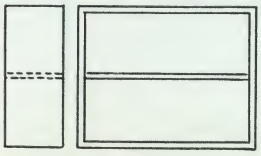

F-212

wall hung desks

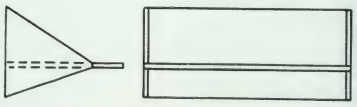

F-344

bed

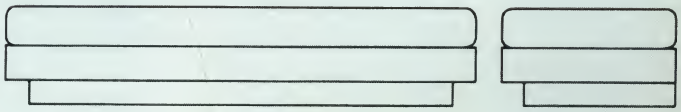

H-380

book shelves

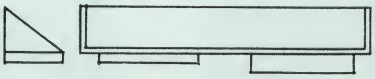

F-224-3110, with letter bin and drawer

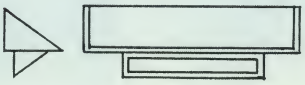

F-222-3, with F-43 fluorescent light

DORM LINE by SIMMONS

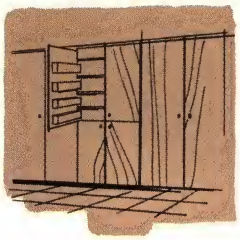

Simmons Colors

23 Heather Green
24 Mist Green
25 Aqua
28 Peach Tan
29 Dawn Pink
33 White
35 Warm Grey
36 Natural
38 Charcoal
41 Colonial Red
42 Dutch Tile Blue
45 Pale Citron
46 Butterscotch
48 Aluminum
49 Moonstone Blue

Simmons Plastics

AM Sable
AQ Cherry
AR Gra-Tan Provincial
AY Sliced Birch
AZ Teak
BA Walnut
FH Burma Teak
FJ Oriental Walnut

Three types of high pressure melamine plastics are used on Simmons furniture; Textolite by General Electric, Fiberesin and Park Panel. All meet N.E.M.A. Standards and Federal Specifications for high pressure decorative laminates. They will withstand abrasion, bumps, knocks and scratching which would ruin other materials. They will not warp or separate, cannot be ringed by glasses or burned by a forgotten cigarette. Simmons furniture may be ordered in any of the finishes listed above with plastic protection as required. Color samples of paints and plastics are available at the sales offices listed below.

Write for catalog and price list covering the complete Simmons line of built-in, free-standing and upholstered furniture.

SIMMONS COMPANY

display rooms

Chicago 54, Merchandise Mart
New York 16, One Park Avenue
San Francisco 11, 295 Bay Street
Atlanta 1, 353 Jones Avenue, N.W.
Dallas 9, 8600 Harry Hines Blvd.
Columbus 8, 1275 Kinnear Road
Los Angeles 22, 3217 S. Garfield Ave.

Digitized by:

ASSOCIATION
FOR
PRESERVATION
TECHNOLOGY,
INTERNATIONAL
www.apti.org

BUILDING
TECHNOLOGY
HERITAGE
LIBRARY

https://archive.org/details/buildingtechnologyheritagelibrary

From the collection of:

Carol J. Dyson, AIA